A. MECHANICAL(unit:mm)

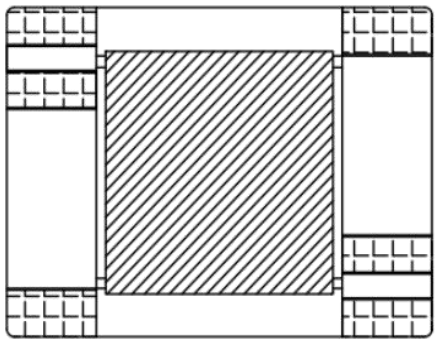

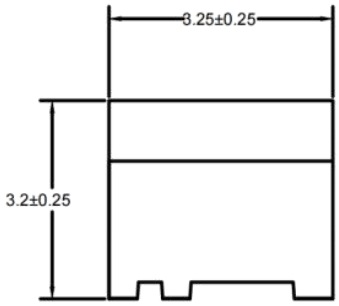

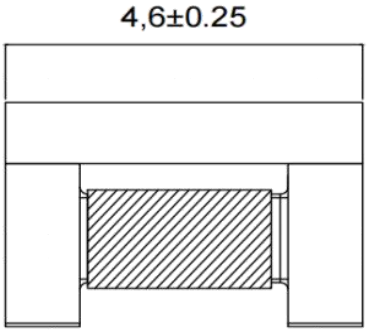

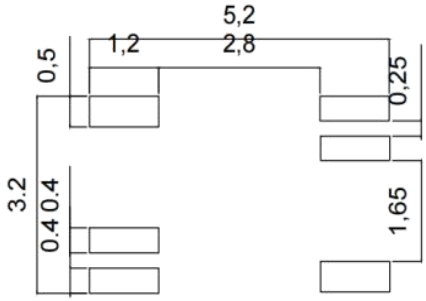

SUGGESTED LAND PATTERN

S TM 4532 B - 121
A B C D E

A: Series
B: LAN Transforner
C: Dimension 4.5*3.2
D: TYPE
E: Inductance 121=120uH

B. SCHEMATICS

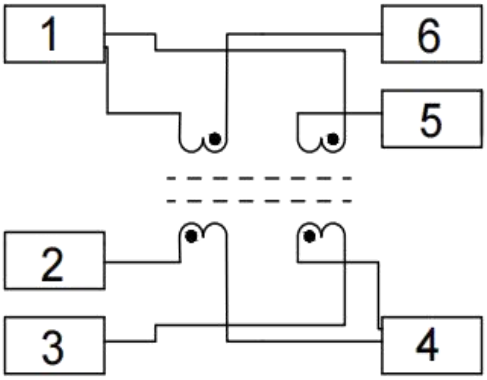

东莞顺为半导体有限公司

Dongguan Shunwei Semiconductor Co. , Ltd.

C.Features

1. Compliant with ROHS requirements
2. Compliant with Halogen Free requirement
3. Compliant with IEEE 802.3an standard
4. Operating temperature -40℃ to +110℃
5. Support LAN interface for network equipment, communication equipment, digital appliances, etc

D. ELECTRICAL SPECIFICATIONS @25°C

Part Number	DESCRIPTION	Turns Ratio ±5%	Insertion Loss (dB Typ.) Max				Rturn Loss (dB Typ.) Min					OCL 100K/0.1V 8mA DC (uH Min) -25℃TO+110℃	OCL 100K/0.1V 8mA DC (uH Min) -40℃TO-25℃	CW/W; 100K/0.1V (pF Max)	PoE Rating	Leakage Inductance 100k/0.1v (uH Max)	Hi-pot (Vrms 1mA 60S Min)
			1-100 MHz	100-125 MHz	200-250 MHz	300-500 MHz	1-100 MHz	100-200 MHz	200-250 MHz	300-400 MHz	400-500 MHz						
STM4532B-351	100M/1000M	1:1	-0.8	-1.0	/	/	-10	/	/	/	/	350	300	35	NON-PoE	0.5	1500
STM4532B-181	2.5G/5G	1:1	-0.8	-1.0	-2.0	/	-20	-13	-10	/	/	180	160	35	NON-PoE	0.5	1500
STM4532B-121	10G	1:1	-0.9	-0.9	-1.6	-2.0	-20	-17	-14	-13	-12	120	100	35	NON-PoE	0.5	1500

E. RECOMMEND REFLOW SOLDERING CURVE

1. Lead Free Solder re-flow

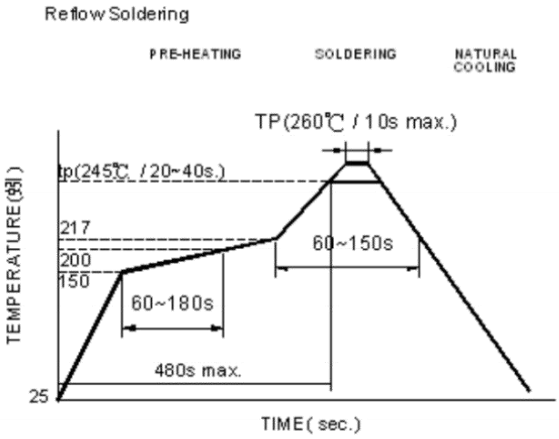

Reflow times: 3 times max.

2 Soldering Iron

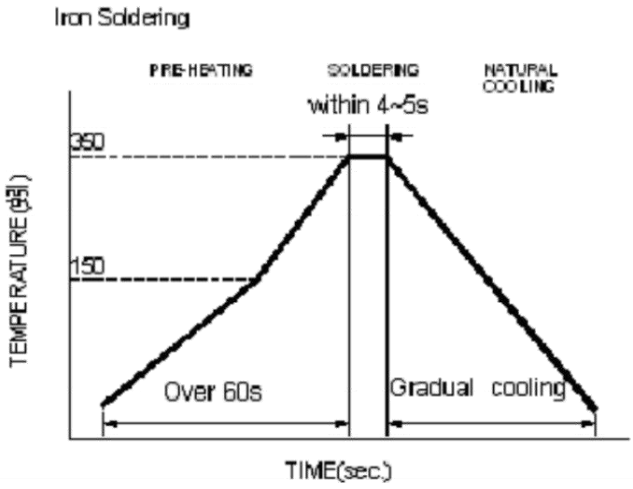

Iron Soldering times: 1 times max.

F.Typical Impedance v.s. Frequency Curve

10G

2.5G/5G

100M/1000M

G.PACKAGE INFORMATION

1.TAPE AND REEL SPECIFICATIONS

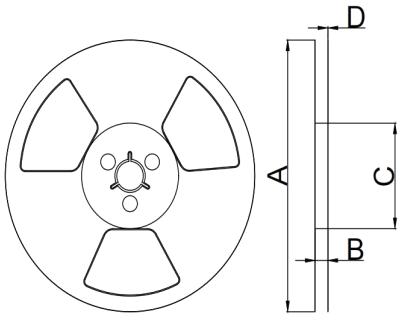

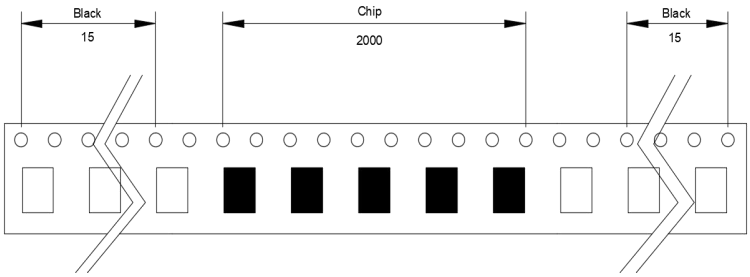

DIM A±2	DIM B+0.8	DIM C±2	DIM D±0.2
330	13	103	1.6

东莞顺为半导体有限公司

Dongguan Shunwei Semiconductor Co. , Ltd.

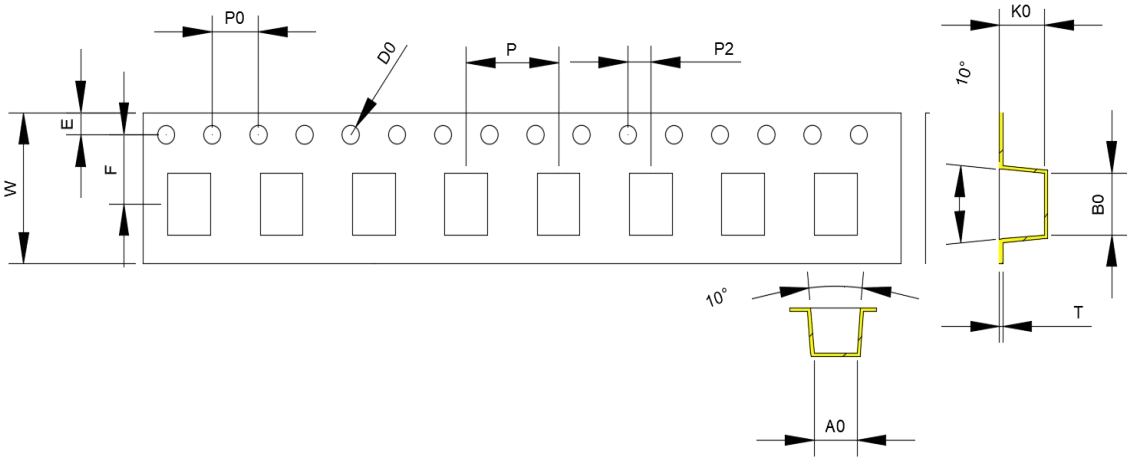

ITEM	W	A0	B0	K0	E	F	D0	P0	P	P2	T
DIM	12	3.7	4.88	3.6	1.75	5.5	1.5	4	8	2	0.3
TOLE	±0.3	±0.15	±0.15	±0.15	±0.1	±0.1	±0.1	±0.1	±0.1	±0.1	±0.1

2. PACKAGE SPECIFICATIONS

Inner Carton

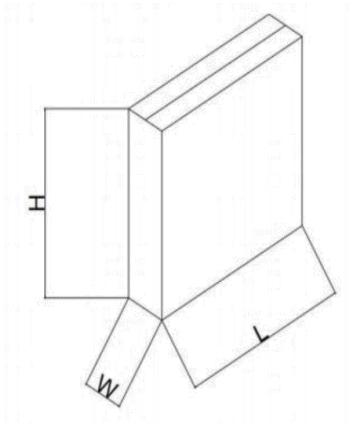

L(mm)	W(mm)	H(mm)
342±5	100±5	342±5

Export Carton

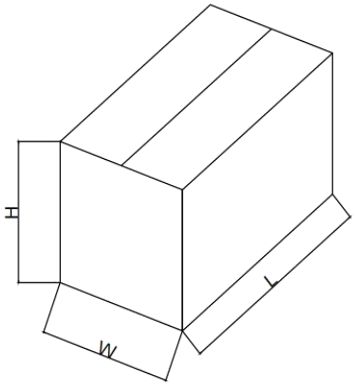

L(mm)	W(mm)	H(mm)
345±5	320±5	355±5